THIS DOCUMENT IS THE PROPERTY OF WANG LABORATORIES, INC. AND SHALL NOT BE REPRODUCED OR COPIED, OR USED AS A BASIS FOR THE MANUFACTURE OR SALE OF APPARATUS OR DEVICES WITHOUT PERMISSION.

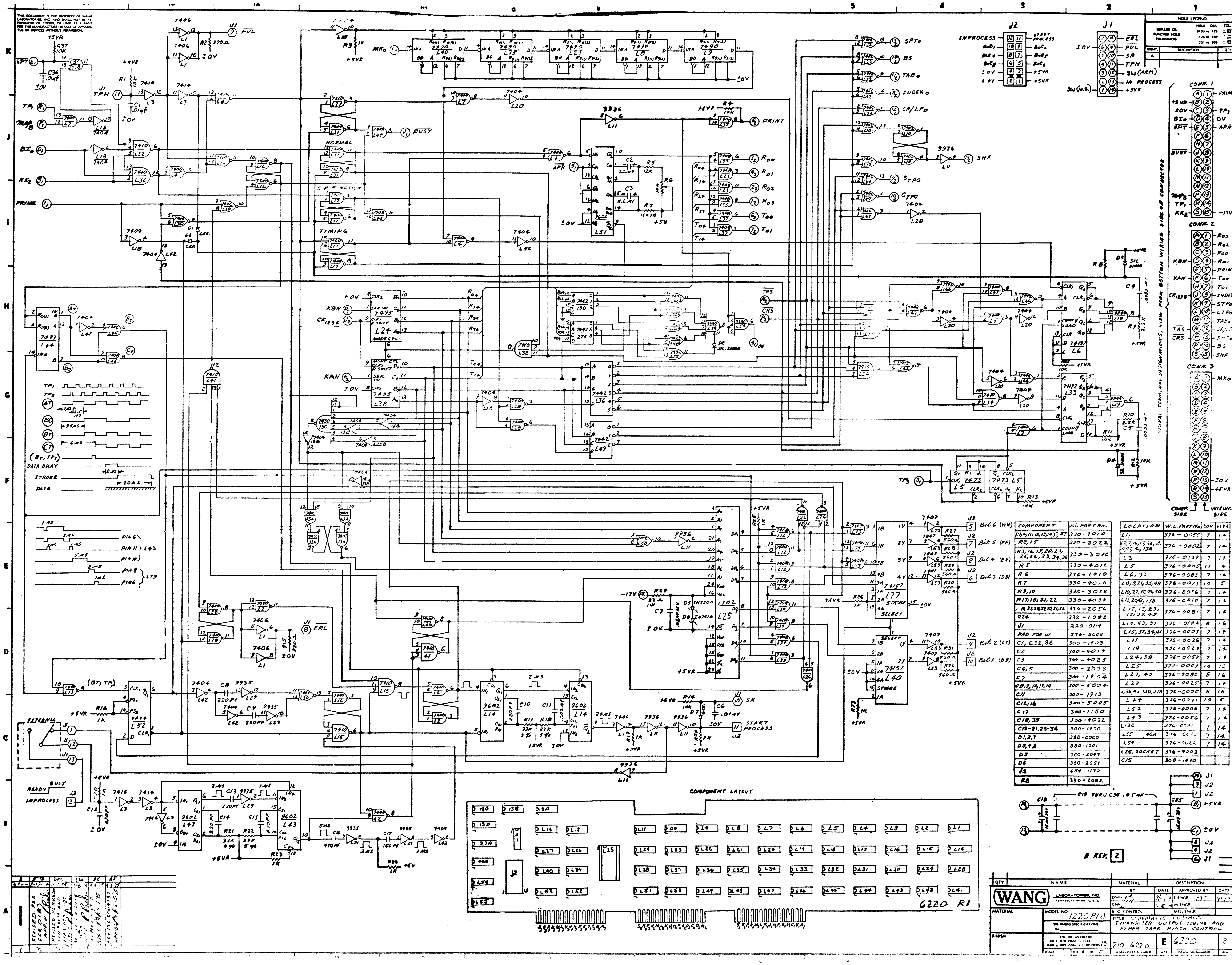

COMPONENT	W.L. PART NO.
R1,4,11,12,13,14,35,37	330-4010
R2,15	330-2022
R3,16,19,20,23,25,26,33,34,36	330-3010
R5	330-4012
R6	336-1010
R7	330-4016
R9,10	330-3022
R17,18,21,22	330-4034
R27,28,29,30,31,32	330-2056
R24	332-1082
J1	220-0114
PAD FOR J1	376-9008
C1,6,22,36	300-1903
C2	300-4014
C3	300-4025
C4,5	300-2033
C7	300-1904
C8,9,10,13,14	300-5004
C11	300-1913
C12,16	300-5005
C17	300-1150
C18,35	300-4022
C19-21,23-34	300-1900
D1,2,7	380-0000
D3,4,8	380-1001
D5	380-2047
D6	380-2051
J2	654-1172
R8	330-2082

LOCATION	W.L. PART No.	±OV	+5VR
L1,	376-0055	7	14
L2,7,16,17,26,28,30,47,4,13A	376-0002	7	14
L3	376-0137	7	14
L5	376-0005	11	4
L6,33	376-0083	7	14
L8,9,21,35,48	376-0073	10	5
L10,22,39,46,50	376-0016	7	14
L18,20,42,13B	376-0010	7	14
L12,13,23,37,39,45	376-0081	7	14
L14,43,51	376-0104	8	16
L15,32,34,41	376-0003	7	14
L11	376-0026	7	14
L19	376-0024	7	14
L24,38	376-0057	7	14
L25	377-0007	14	12
L27,40	376-0082	8	16
L29	376-0025	7	14
L36,49,13D,27A	376-0008	8	16
L44	376-0011	10	5
L52	376-0006	7	14
L53	376-0056	7	14
L13C	376-0031	7	14
L55 , 40A	376-0093	7	14
L54	376-0022	7	14
L25, SOCKET	376-9003		
C15	300-1470		

HOLE LEGEND — DRILLED OR PUNCHED HOLE TOLERANCES: HOLE DIA. .0135 to .125 TOL. +.003 −.001; .126 to .250 +.004 −.001; .251 to .500 +.005 −.001

REVISION: REVISED PER ECR 0183 APP'D; REVISED PER ECN 4406 AND 4407 ... APP'D; ... ECN ...; REV PER ECN 4737 APP'D

WANG LABORATORIES, INC. TEWKSBURY, MASS. U.S.A.

MODEL NO. 1220 P.I.O.

TITLE SCHEMATIC LOGIC, TYPEWRITER OUTPUT TIMING AND PAPER TAPE PUNCH CONTROL

TOL EX AS NOTED XX ± .010 FRAC ± 1/64 XXX ± .005 ANG ± 1°30' FINISH

WANG PART NUMBER 210-6220 SIZE E DRAWING NUMBER 6220 REV 2

SHT 4 OF 5

6220-1