THIS DOCUMENT IS THE PROPERTY OF WANG LABORATORIES, INC. AND SHALL NOT BE REPRODUCED OR COPIED, OR USED AS A BASIS FOR THE MANUFACTURE OR SALE OF APPARATUS OR DEVICES WITHOUT PERMISSION.

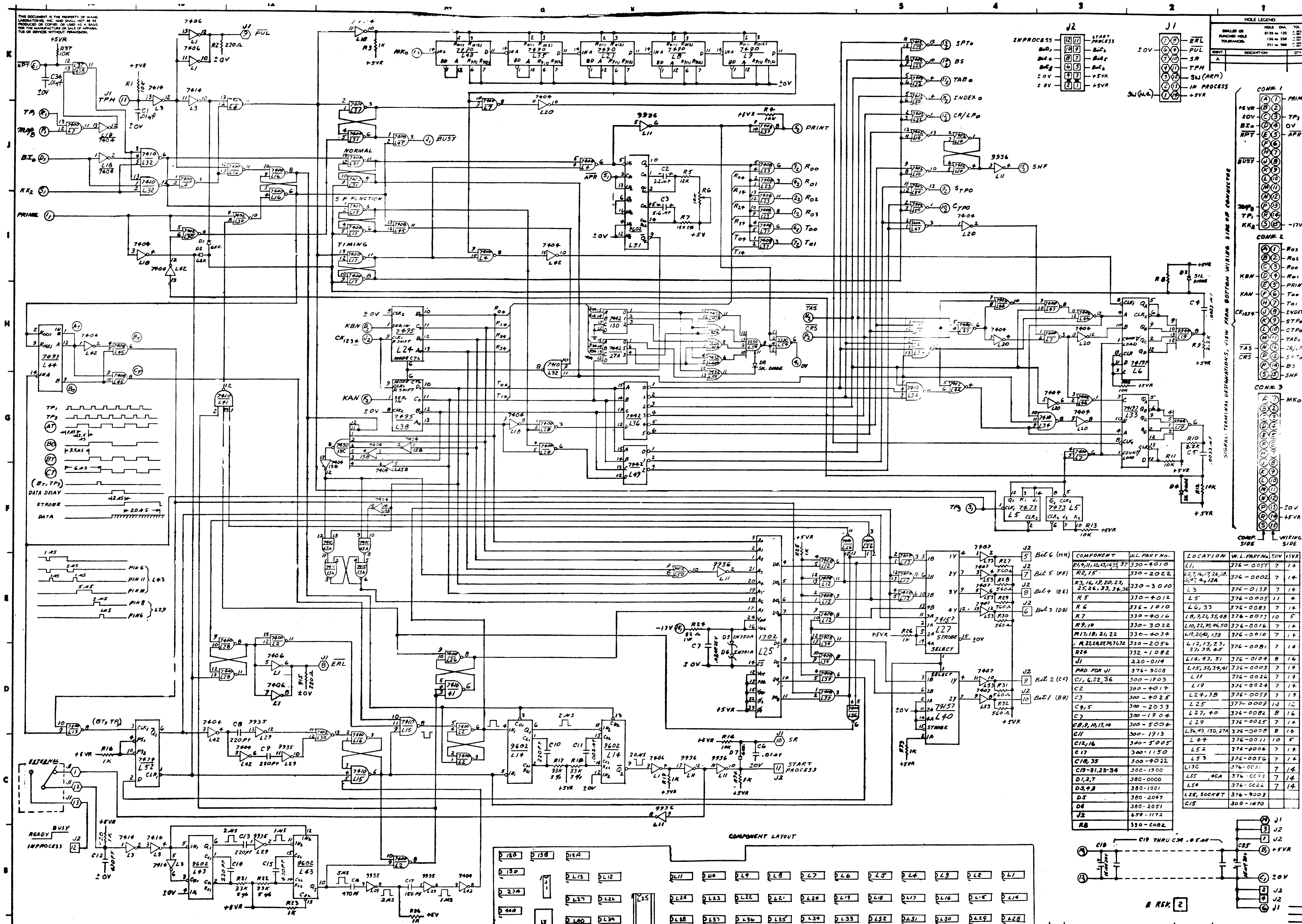

COMPONENT	W.L. PART NO.
R1,4,11,12,13,14,35,37	330-4010
R2,15	330-2022
R3,16,19,20,23,25,26,33,34,36	330-3010
R5	330-4012
R6	336-1010
R7	330-4016
R9,10	330-3022
R17,18,21,22	330-4034
R27,28,29,30,31,32	330-2056
R24	332-1082
J1	220-0114
PAD FOR J1	376-9008
C1,6,22,36	300-1903
C2	300-4019
C3	300-4025
C4,5	300-2033
C7	300-1904
C8,9,10,13,14	300-5004
C11	300-1913
C12,16	300-5005
C17	300-1150
C18,35	300-4022
C19-21,23-34	300-1900
D1,2,7	380-0000
D3,4,8	380-1001
D5	380-2047
D6	380-2051
J2	654-1172
R8	330-2082

LOCATION	W.L. PART No.	±OV	+5VR
L1	376-0055	7	14
L2,7,16,17,26,28,31,47,4,13A	376-0002	7	14
L3	376-0137	7	14
L5	376-0005	11	4
L6,33	376-0083	7	14
L8,9,21,35,48	376-0073	10	5
L10,22,30,46,50	376-0016	7	14
L18,20,42,13B	376-0010	7	14
L12,13,23,37,39,45	376-0081	7	14
L14,43,51	376-0104	8	16
L15,32,34,41	376-0003	7	14
L11	376-0026	7	14
L19	376-0024	7	14
L24,38	376-0057	7	14
L25	377-0007	14	12
L27,40	376-0082	8	16
L29	376-0025	7	14
L36,49,13D,27A	376-0008	8	16
L44	376-0011	10	5
L52	376-0006	7	14
L53	376-0056	7	14
L13C	376-0031	7	14
L55, 40A	376-0093	7	14
L54	376-0022	7	14
L25, SOCKET	376-9003		
C15	300-1470		

E REV. 2

WANG LABORATORIES, INC. TEWKSBURY MASS. U.S.A.

MODEL NO. 1220 P.I.O.

TITLE SCHEMATIC LOGIC, TYPEWRITER OUTPUT TIMING AND PAPER TAPE PUNCH CONTROL

WANG PART NUMBER 210-6220 | SIZE E | DRAWING NUMBER 6220 | REV 2

SHT 4 OF 5